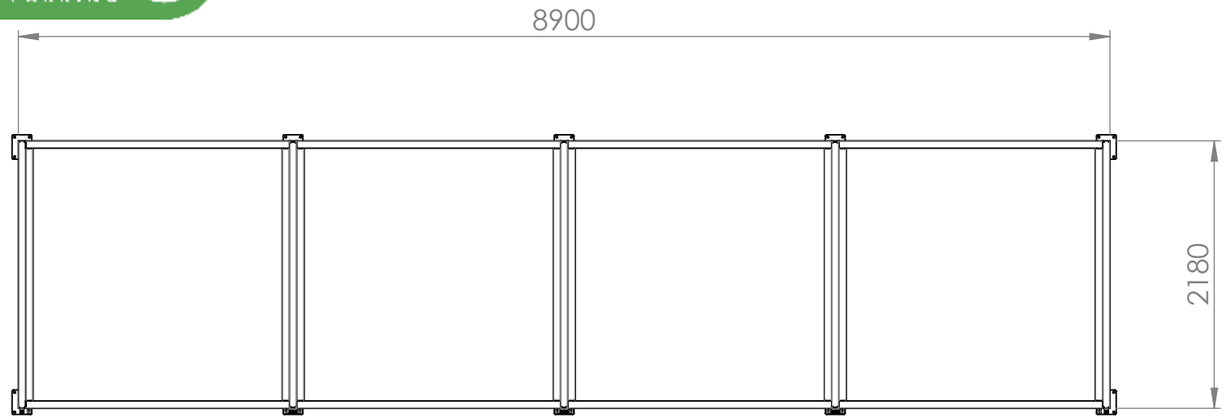

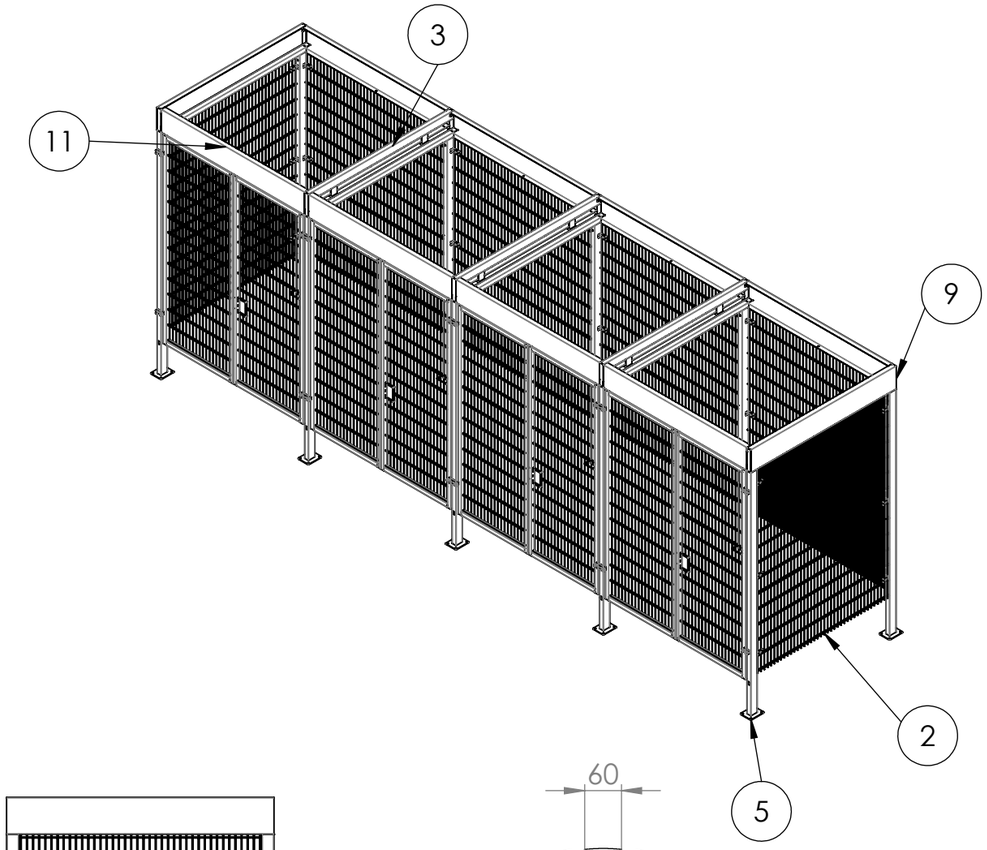

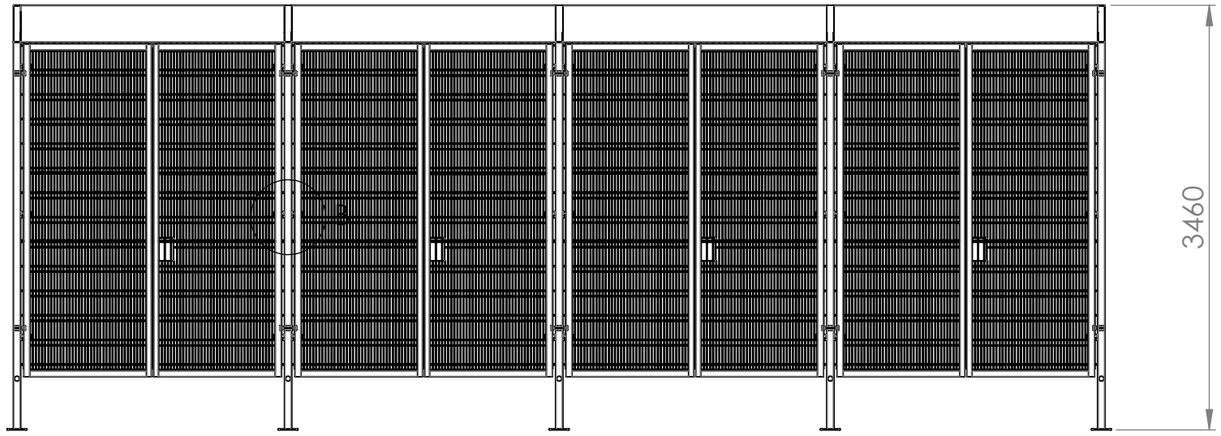

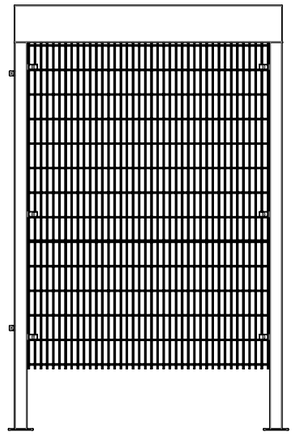

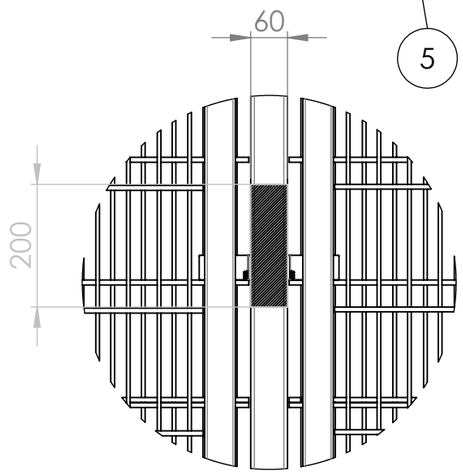

B (1 : 10)

Steel type S235 JR galvanized

(measurements in mm)